SAMZO | REAC/ROHS

REV	ECN NO	DESRIPTION	DESIGN	APPROVAL	DATE
A1	NEW	Replace frame			2019.02.27

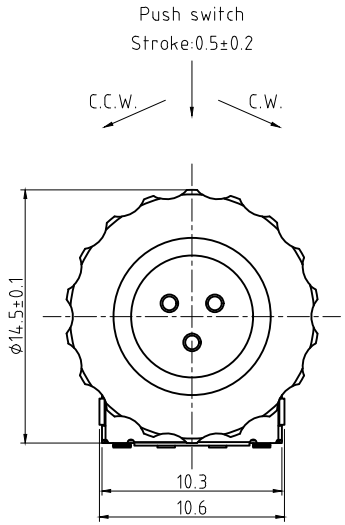

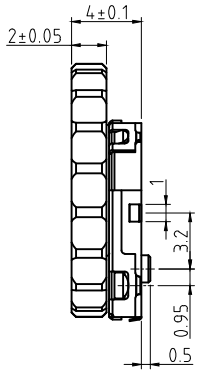

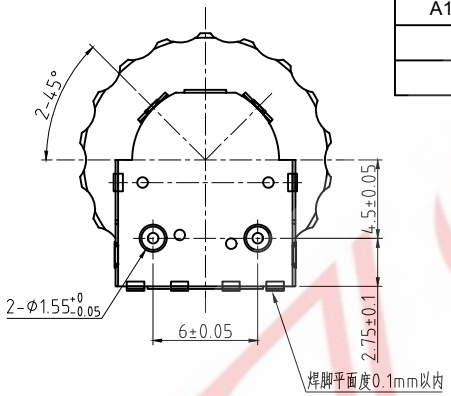

Performance:
Rating:0.5mA, 5V DC
Contact Resistance:1Ω or less
Insulation Resistance:10MΩ or more
Withstand Voltage:1minute at 50V AC
Operating Force:3~6N(Part Slide)
Rotational Torque:5mN·m(49gf·cm)
or less (Part Rotary encoder)
Life:50,000 cycles (Part Slide)
50,000 cycles (Part Rotary encoder)

CIRCUIT

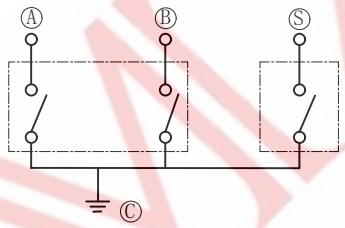

S I Q - 02 F V S 3
① ② ③ ④ ⑤ ⑥ ⑦ ⑧

1. S-(Switch)
2. I-(Digital output)
3. Q-(Slide and Rotary encoder)
4. 02-(2-circuit)
5. F-(15-detent)
6. V-(Installation:Vertical insert,Hand Soldering.)
7. S-(Standard)
8. 3-(Re-flow soldering type)-Mounting shape

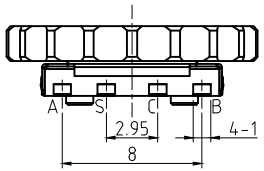

A-C&B-C:ENCODER
S-C:SLIDE SW
C:COM

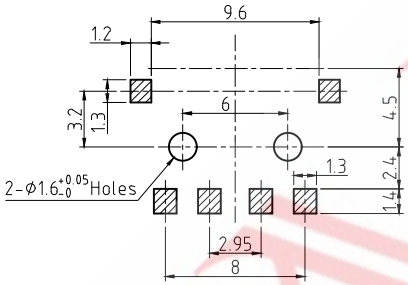

P.C.B.MOUNTING DETAIL

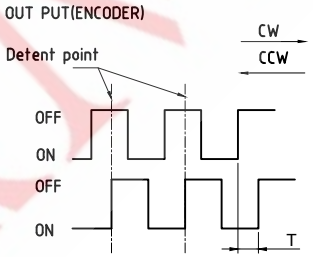

ITEM	DESCRIPTION	MATERIAL	QTY	FINSH/COLOR					
5	吸盖	LCP	1	黑色				GENERAL TOLERANCE	
4	焊片	磷铜	2	镀锡				≥0~2<	±0.15
3	后盖	LCP	1	黑色	DESIGN	WANGGUIFA	2018.06.12	≥2~5<	±0.25
2	端子	磷青铜	N	镀锡	CHECKED	ZHENGUILAN	2018.06.12	≥0~2<	±0.15
1	胶芯	LCP	1	本色	APPROVED	LILIANJIANG	2018.06.14	≥5	±0.35

FIRST VIEW

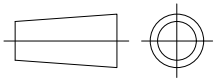

SCALE	1:1	UNIT	mm

The copyright belongs to samzo parts [China] Co., Ltd. please use the material after samzo parts agree to authorize. The final right of interpretation belongs to samzo parts.
WWW.KKK-JP.COM

SAMZO COMPONENTS
Electronic switch and connector manufacturer

TITLE:: Small mount area.(11.1*10). Rotary encoder is 15 detents.
DWG NO: SIQ-E002
PART NO: SIQ22041701
MODEL NO: SIQ-02FVS3
NAME: Micro encoder